purix

Designed for Green Living

Product Catalogue

Powered by the Sun

The Purix Green air conditioning system helps you build a green tomorrow without compromising basic needs for a comfortable and healthy indoor environment - where and when you need it.

Powered by the sun - and based on water as natural refrigerant - air conditioning may become clean, efficient and comfortable.

Features

Powered by the sun when available - but works around the clock. Operates without sun by automatically switching to backup heat supply when available.

Gently cools without drying out the indoor environment
- or enjoy the heating from the solar collectors.

Low electricity consumption. Reduces energy costs for cooling and heating.

Flexible design for match with indoor environment
- various fan coil types,
- mono & multi split design.

Low noise level.

Applies water as natural refrigerant.

Flexible Design

Purix offers a unique opportunity for going green and maintain a healthy and comfortable indoor environment.

The patented Solar Cooling system complements conventional products widely used in homes, hotels, resorts, offices, schools or shops – just to mention a few.

The flexible product design recognizes the need for integration with different interior designs or architecture, and supports various types of indoor units, as well as mounting kits for the solar collectors.

Depending on the building layout and cooling demand, the unit supports both mono- and multi split installation.

The Scandinavian roots of Purix are part of our culture and product design, supporting you in building a green tomorrow.

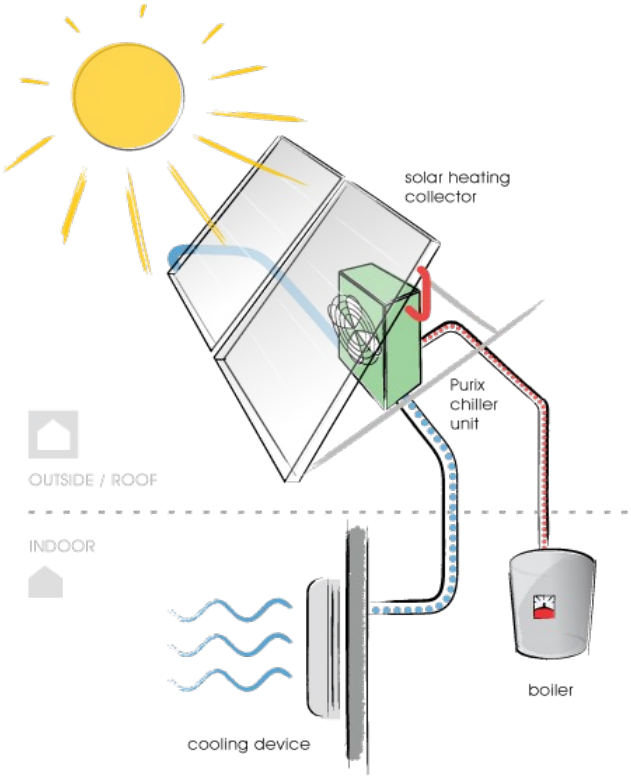

The core technology of PURIX is the absorption cooling technology widely used, for instance, in refrigerators in hotel rooms. The solar cooling unit is designed for operation with solar thermal energy and/or with a low temperature energy source, and consists of three main parts:

1 – Solar thermal collectors
2 – Outdoor unit (Chiller)
3 – Indoor unit(s)

Detailed specifications

Solar Collectors

Type of collector	Frame collector
Gross area [m²/panel]	2,51
Absorber area [m²/panel]	2,3
Aperture area [m²/panel]	2,39
L x W X H [mm]	2150 x 1170 x 83
Weight empty [kg]	app. 42
Housing material	Natural Al
Absorber	Meander, Al – high selectiv vacuum coating
Absorption [%]	95
Emission [%]	5
Glass	3,2mm tempered solar safety glass
Transmisson [%]	90
Insulation	40mm mineral wool
Max. stagnation temperature	ca. 234°C at teststand
Certificates	EN12975-1 / EN12975-2 / CEN Keymark
Guarantee	5 years

Options for installation

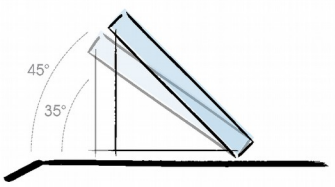

FLAT ROOF / GROUND

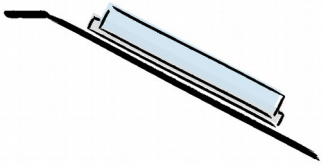

ON-ROOF, PARALLEL

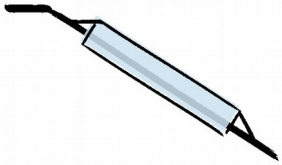

IN-ROOF MOUNTING

Detailed specifications

Indoor Units


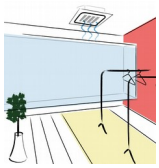


		Wall mounted	Cassette	Floor / ceiling
Cooling/heating capacity	[kW]		2,5/2,5	
Power input, (230V AC, 50Hz)	[W]	<50	<110	<80
Air flow (Hi/Med/Low)	[m³/h]	500/416/362	600/559/529	1000/765/510
Sound pressure level	[dB(A)]	<48	<47	<47
Dimensions (WxDxH)	[mm]	940x200x298	840x840x190	1300x188x600
Net weight	[kg]	13	27	34
Connection pipe size	[inch/mm]			
- Water in/out		½" / 12,7	¾" / (19,05)	¾" / (19,05)
- Condensate		15,6	33	33
Controller, std./option			Wireless/wired	

Features

- Quiet operation	+	+	+
- Multi fan speed	+	+	+
- Auto clean	+	+	+
- Washable filter	+	+	+
- Built-in drain pump		+	

Detailed Specification

Outdoor Unit

Type		Chiller for mono- and multisplit installation (up tp 3 indoor units)
Technology		1-stage absorption heat pump, LiBr-H2O, Air cooled
Cooling/Heating capacity	[kW]	2,5/2,5 (nominal at 35°C)
Refrigerant		R718 (Water)
Cooling media, indoor units		Chilled water
Temperature	[°C]	13 / 18 (supply/ return)
Connections		G1/2"
Volume, expansion tank	[l]	2
Pressure, max.	[Bar]	1
Backup energy supply		Circuit of Low temperature heating water (LTHW)
Input	[kW]	3,1(nominal at 35°C ambient, ΔT = 5°C)
Temperature, min.	[°C]	Depending on ambient temperature*
Connections		G1/2"
Pressure, max	[Bar]	3
Max. Head pump	[m]	5,5
Power input	[W]	<130 (230V AC, 50Hz.)
Sound pressure level	[dB(A)]	<45
L x W X H	[mm]	650 x 450 x 1350
Weight empty	[kg]	app. 65

*Required supply temperature

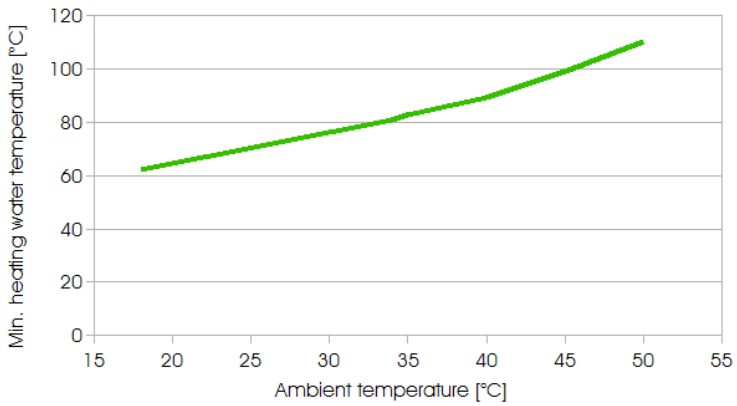

Dimensions and Connections

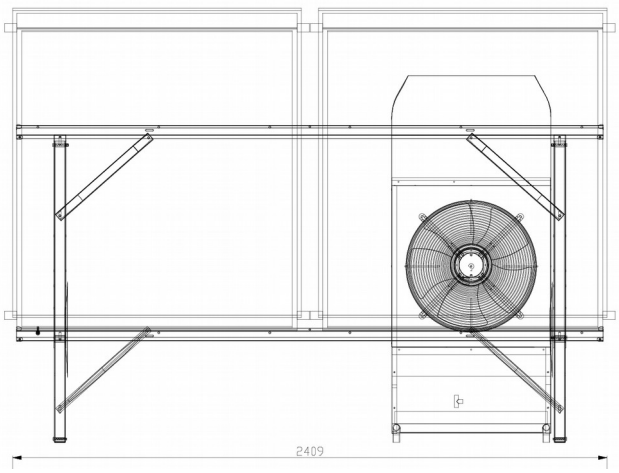

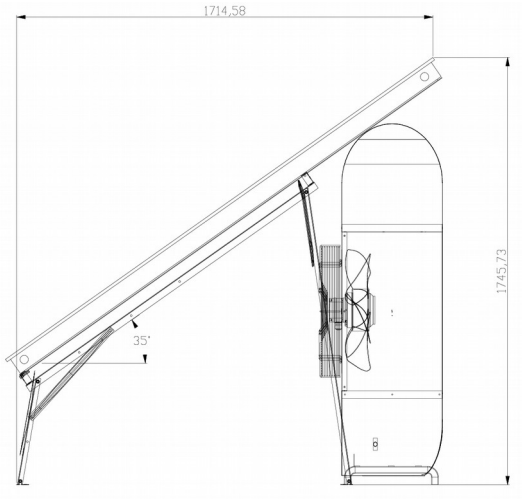

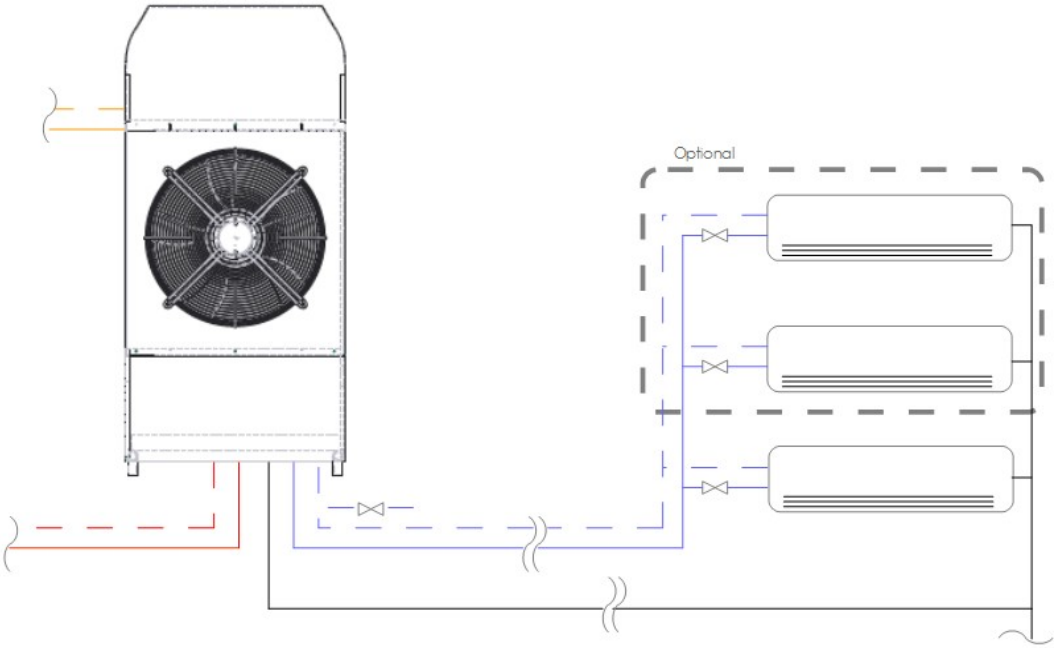

	Electricity, 230 VAC, 50Hz		Heating water, return
	Chilled water, supply		Working fluid (Collectors), supply
	Chilled water, return		Working fluid (Collectors), return
	Heating water, supply		

The Purix 'Why'

We believes that people should experience a comfortable and healthy indoor environment without compromising sustainability.

PURIX will provide products which supports our users in building a Green tomorrow and strive towards an unnoticed user experience.

We do not wishto see it, hear it or feel it, but just make it happen. We want people to trust that it is being done in this way."

PURIX ApS
Langogade 17
2100 Copenhagen
DENMARK

Tel. +45 7734 2280